Woo Chang Coupling Co.,Ltd
Mechanical Power Transmission Systems

Mechanical Power Transmission Systems

U-FLEX COUPLING

U-FLEX STANDARD

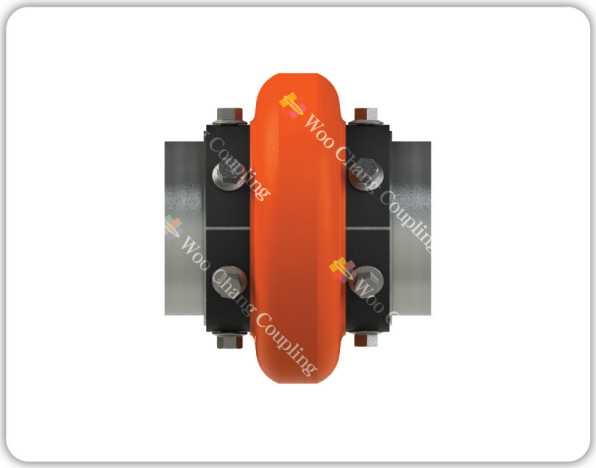

U-FLEX SPACER

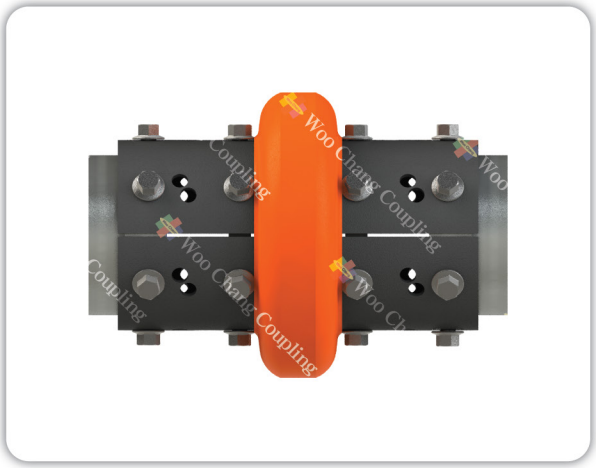

U-FLEX SPACER EXTENDED

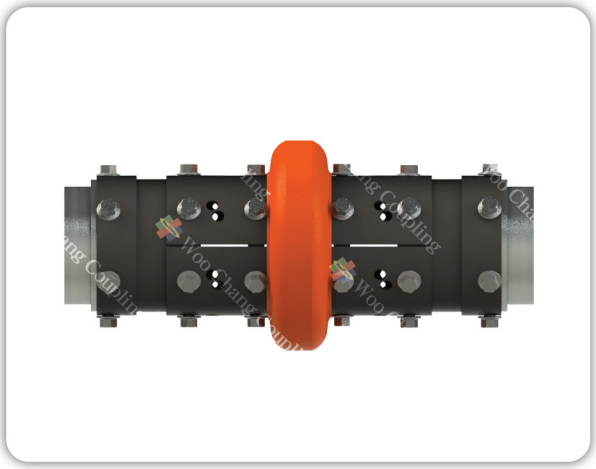

U-FLEX COUPLING

Characteristics & Advantages

U-flex Coupling uses a polyurethane material with excellent elasticity and flexibility. It has no moving parts, does not need lubrication, does not generate pollutants, has high elasticity, has excellent capacity for misalignment, and is easy to maintain. It can be applied to a wide variety of industrial equipment, from small to medium size. The convenience of low maintenance and cost reduction are excellent.

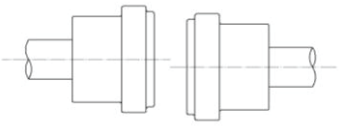

Parallel Misalignment

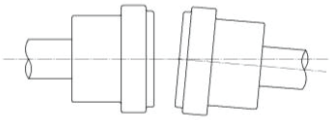

Angular Misalignment

The elastic urethane element can be used in angular misalignment up to 4° and parallel misalignment of up to 4.8mm.

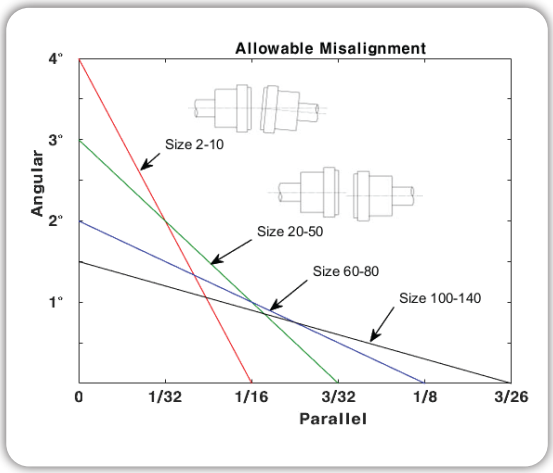

Size	Hub diameter	Parallel misalignment (max.)	Angular Misalignment			
			1°	2°	3°	4°
U02	47.0	1.6	0.8	1.6	2.4	3.3
U03	59.0	1.6	1.0	2.0	3.0	4.1
U04	66.0	1.6	1.2	2.4	3.7	5.0
U05	80.0	1.6	1.4	2.9	4.3	5.7
U10	93.0	1.6	1.6	3.3	4.9	6.5
U20	114.0	2.4	2.0	4.1	6.1	-
U30	138.0	2.4	2.4	4.9	7.3	-
U40	168.0	2.4	3.0	5.9	8.8	-
U50	207.0	2.4	3.7	7.3	11.1	-
U60	222.0	3.2	3.9	7.7	-	-
U70	235.0	3.2	4.3	8.5	-	-
U80	286.0	3.2	5.0	10.0	-	-
U100	359.0	4.8	6.3	-	-	-
U120	448.0	4.8	7.3	-	-	-
U140	530.0	-	-	-	-	-

Characteristics

- Disassembly and assembly are easy and quick.
- It can protect the system by buffering well against impacts, such as emergency stops.
- Its light weight and small moment of inertia causes less load on shafts and power sources (motors or engines).
- The structure is simple, and the necessary space is small.
- Excellent flexibility and stability during operation.
- It is safe, has low noise, and has excellent water and chemical resistance.
- The allowable amount of misalignments, such as angular and parallel, are high.
- It is easy to replace parts and maintain without lubrication.

Application

U-flex Coupling can be used in applications such as high impact mines, pumps, etc. as well as in sanitary plants or chemical and food industries where hygiene is required. It can also be used in various industrial fields such as general industry to replace small and medium-sized mechanical couplings. It is ideal for systems involving irregular impact, or that require no lubrication and easy maintenance.

-Pump
-Fans and blowers
-Compressor
-Electric motor
-Conveyor
-Elevator
-Agitator
-Cranes and Hoists
-Brewery distillation unit
-Pulp and Paper mill
-Rubber industry
-Steel industry
-Fabric factories
-Aggregate treatment
-Cement plant
-Food industry
-Wood industry

Structure

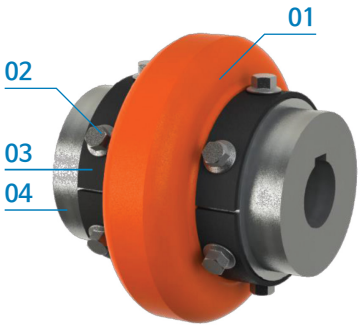

PART

01 Flex Element
02 Cap Screw
03 Sleeve
04 Hub

Design features

Instruction for Installation

STEP 01
Install one hub on the shaft and loosely position the other hub for spacing adjustment.

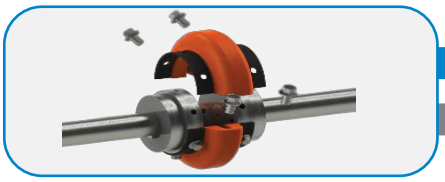

STEP 02
Place half of the element around the hub and lightly fasten it with the auto-locking cap screw.

STEP 03
Fit the other half of the element. Tighten the cap screw that has the recommended torque or less.

STEP 04
Use a torque wrench to mount it with the appropriate torque value for each standard.

Size	Torque				Cap screw	
	in.Lbs	Ft.Lbs	Nm	Kg·m	Consu-mption	Size
U02	204	17	23	2.4	8	M6 x P1.0
U03					8	
U04					8	
U05					8	
U10					12	
U20	360	30	41	4.2	12	M10 x P1.5
U30					12	
U40					16	
U50					16	
U60	816	68	92	9.4	16	M12 x P1.75
U70					16	
U80					16	
U100	3,240	290	393	40.1	20	M20 x P2.5
U120					24	
U140	7,080	590	800	81.6	32	M24 x P3.0

Handling & Precautions

Before using U-flex Coupling, please observe the following guidelines. If you do not follow these instructions, material damage to the machine and serious damage to parts may occur. In addition, personal injury or death may result from damaged parts during operation.

Refer to the catalog when selecting coupling products. The catalog contains installation instructions, and product specifications such as Size, Torque (Nm), and Rated Operating Speed (rpm). Do not exceed the specified range.

Pay attention to the following points when using the product.

- During start-up and operation of the powertrain, excessive shock loads should be avoided.
- Ensure the assembled coupling works quietly.
- If vibration or noise occurs in the coupling assembly, stop operation immediately and check the following items.

The couplings are designed to break before the shaft or system is damaged in response to shocks over the selected torque. Therefore, when selecting a product, it is necessary to calculate an appropriate safety factor. When the coupling breaks, a missile may be caused as parts can be ejected with force. Appropriate anti-scattering measures should be established to prevent personal injury and property damage. We are not responsible for any damage that may occur if emergency measures are not in place.

Size selection method

- When there are multiple commercial revolutions (N) and a minimum number of revolutions (N), select a value less than or equal to the rated number of revolutions.
- It should be noted that the load during normal reverse rotation, repeated overloading or discontinuous operation, should be twice as large as in normal cases.

Precaution for selection
- Visual inspection: Check parts for damage and ensure bolts are tightened.
- Alignment: Ensure the alignment is within the allowable range.

Replacement of the coupling is required if the following abnormal conditions are found during the check process:
- Excessive deformation of the contour.
- Damage (tearing) or excessive curing of the elastic part.

U-flex Standard

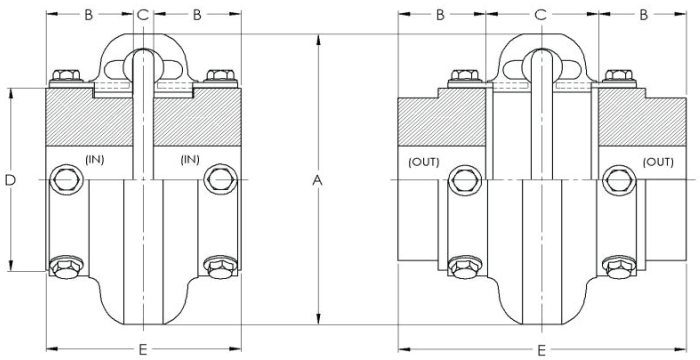

Size	Bore (max.)	RPM (max.)	HP/ 100RPM	Basic Torque		Dimensions (mm)							Weight (Kg)
				Kg·m	Nm	A	B	C		D	E		
								In	Out		In	Out	
U02	28.7	7,500	0.30	2.2	21.5	88.9	24.0	34.0	48.3	47.0	81.8	96.0	1.0
U03	35.1	7,500	0.58	4.2	41.2	101.6	38.0	20.6	33.3	59.0	96.8	109.5	2.1
U04	41.4	7,500	0.88	6.3	62.1	115.8	43.0	11.2	33.3	66.0	96.8	119.1	2.3
U05	47.8	7,500	1.48	10.7	104.5	136.7	44.0	20.6	46.0	80.0	109.5	134.9	3.7
U10	54.1	7,500	2.30	16.7	163.8	162.1	48.0	14.2	46.0	93.0	109.5	141.2	5.2
U20	60.5	6,600	3.65	26.5	259.9	184.2	52.0	12.7	60.5	114.0	117.4	165.1	8.2
U30	73.2	5,800	5.79	42.1	412.4	209.6	58.0	14.2	62.0	138.0	131.8	179.3	13.7
U40	85.9	5,000	8.85	63.4	621.4	241.3	63.0	14.2	68.1	168.0	141.2	195.1	21.6
U50	92.2	4,200	12.14	88.1	864.3	279.4	70.0	16.0	85.9	207.0	155.7	225.6	30.6
U60	101.6	3,800	19.84	144.0	1,412.3	317.5	82.0	17.5	87.4	222.0	182.6	252.5	43.3
U70	114.3	3,600	35.12	254.9	2,499.8	355.6	92.0	19.1	95.3	235.0	203.2	279.4	51.5
U80	152.4	2,000	62.70	455.1	4,462.9	406.4	124.0	19.1	127.0	286.0	266.7	374.7	108.2
U100	171.5	1,900	135.00	979.9	9,609.4	533.4	140.0	44.5	95.3	359.0	323.9	374.7	168.5
U120	190.5	1,800	270.00	1,959.8	19,218.7	635.0	152.0	57.2	124.0	448.0	361.7	428.8	275.3
U140	279.4	1,500	540.00	3,919.5	38,437.4	762.0	178.0	76.2	127.0	530.0	431.8	482.6	475.6

※ Coupling weight, without bore machining

U-flex Spacer

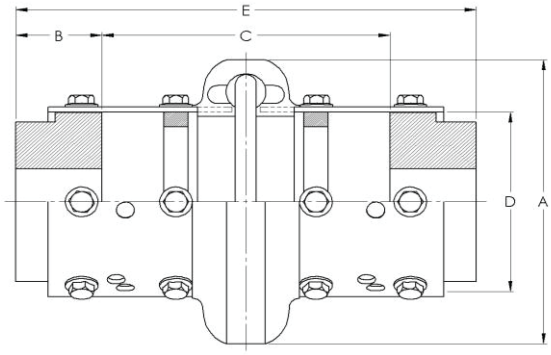

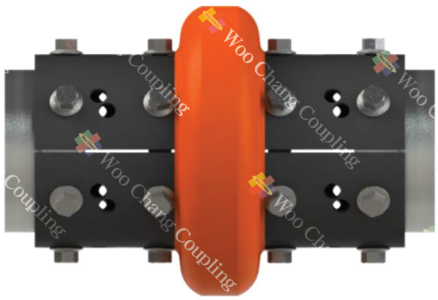

Size	Bore (max.)	RPM (max.)	HP/ 100RPM	Basic Torque		Dimensions (mm)							Weight (Kg)
				Kg·m	Nm	A	B	C		D	E		
								In	Out		In	Out	
US02	28.7	7,500	0.30	2.2	21.5	88.9	24.0	88.9	101.6	47.0	146.1	150.4	1.3
US03	35.1	7,500	0.58	4.2	41.2	101.6	38.0	88.9	127.0	59.0	184.2	203.2	2.5
US04	41.4	7,500	0.88	6.3	62.1	115.8	43.0	88.9	127.0	66.0	184.2	212.9	3.2
US05	47.8	7,500	1.48	10.7	104.5	136.7	44.0	88.9	127.0	80.0	184.2	215.9	4.7
US10	54.1	7,500	2.30	16.7	163.8	162.1	48.0	88.9	127.0	93.0	184.2	222.3	6.4
US20	60.5	4,800	3.65	26.5	259.9	184.2	52.0	64.8	177.8	114.0	238.3	282.5	10.5
US30	73.2	4,200	5.79	42.1	412.4	209.6	58.0	52.1	177.8	138.0	238.3	295.2	16.9
US40	85.9	3,600	8.85	63.4	621.4	241.3	63.0	42.4	177.8	168.0	238.3	304.8	25.7
US50	92.2	3,100	12.14	88.1	864.3	279.4	70.0	29.7	177.8	207.0	238.3	317.5	35.6
US60	101.6	2,800	19.84	144.0	1,412.3	317.5	82.0	67.8	247.7	222.0	317.5	412.8	52.9
US70	114.3	2,600	35.12	254.9	2,499.8	355.6	92.0	50.6	247.7	235.0	317.5	431.8	61.1
US80	152.4	1,800	62.70	455.1	4,462.9	406.4	124.0	55.4	247.7	286.0	317.5	495.3	119.2

※ Coupling weight, without bore machining

U-flex Spacer Extended

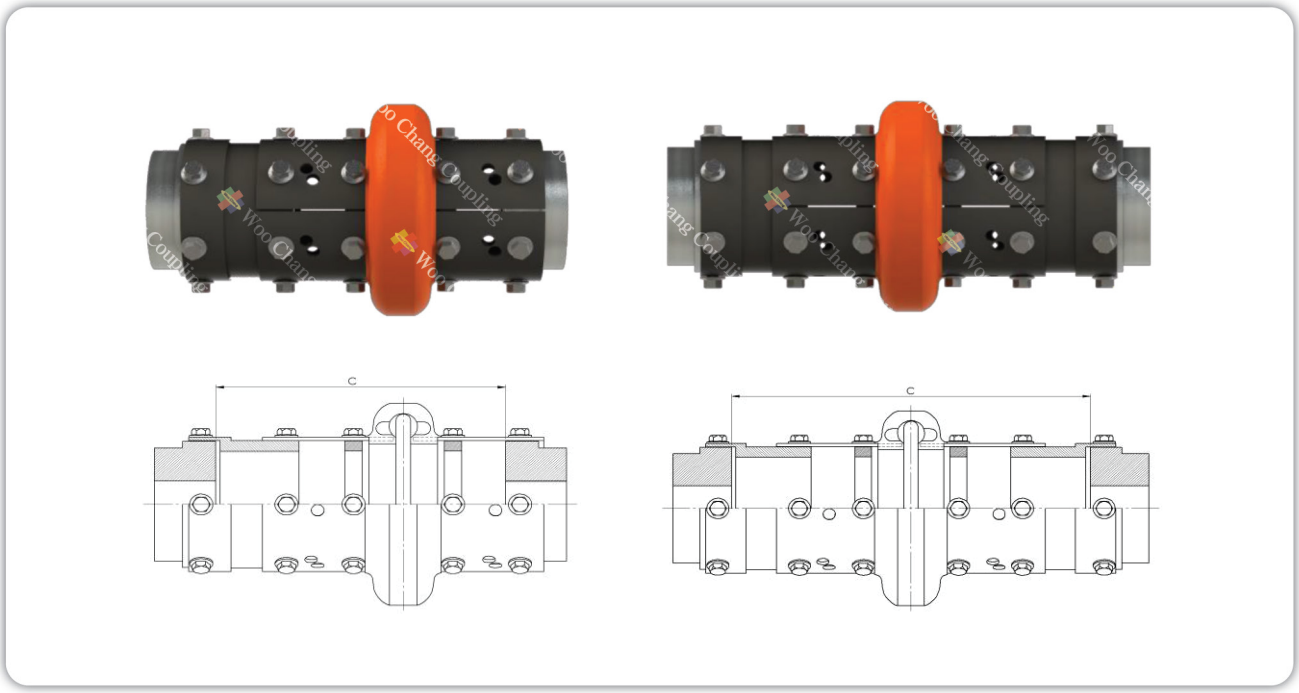

Size	Max. RPM Standard	Max. RPM Matched Assembly	Maximum Spacing "C" Dimensions (mm)									Weight (Kg) Straight Hub Two SE
			Straight Hubs			QD Hubs			Taper Lock Hubs			
			Max. Without SE	One SE	Two SE	Max. Without SE	One SE	Two SE	Max. Without SE	One SE	Two SE	
UE03	1,800	3,600	127.00	177.80	228.60	-	-	-	136.65	187.45	238.25	3.8
UE04	1,800	3,600	127.00	177.80	228.60	141.22	192.02	242.82	136.65	187.45	238.25	4.6
UE05	1,800	3,600	127.00	177.80	228.60	128.52	179.32	230.12	136.65	187.45	238.25	6.6
UE10	1,800	3,600	127.00	177.80	228.60	139.45	190.25	241.05	133.35	184.15	234.95	8.6
UE20	1,800	3,600	177.80	247.65	317.50	176.78	246.63	316.48	171.45	241.30	311.15	14.8
UE30	1,800	3,600	177.80	247.65	317.50	163.58	227.84	297.69	165.10	234.95	304.80	21.6
UE40	1,800	3,600	177.80	247.65	317.50	145.80	209.04	278.89	152.40	222.25	292.10	31.7
UE50	1,800	3,100	177.80	247.65	317.50	158.50	221.74	291.59	152.40	222.25	292.10	43.0
UE60	1,800	2,800	247.65	365.25	482.60	195.07	312.67	430.02	222.25	339.85	457.20	67.4
UE70	1,800	2,600	247.65	384.30	520.70	170.69	307.34	443.74	186.44	323.09	459.49	79.3
UE80	1,500	1,800	247.65	390.65	533.40	120.90	263.91	406.65	173.74	314.20	457.20	141.6
UE100	1,500	1,800	95.25	222.25	349.25	44.45	177.80	311.15	152.40	285.75	419.10	201.6
UE120	1,500	1,800	123.95	257.30	390.65	44.20	171.20	298.20	181.10	308.10	435.10	313.9

※ Coupling weight, without bore machining

Service Factor and Reference

Service Factor

The service factors listed are the typical values used for normal operation of drive systems.
If the applications use repetitive high peak loads, choose a factor by using the provided instructions or formulas.

Table 1

Aiphabetical listing of applications
AERATOR ····· 2.5
AGITATORS
Vertical and Horizontal screw,propeller,Paddle ····· 1.5
BARGE HAUL PULLER ····· 3.0
BLOWERS
Centrifugal ····· 1.5
Lobe or Vane ····· 1.75
CAR DUMPERS ····· 4.0
CAR PULLERS ····· 2.5
CLARIFIER OR CLASSIFIER ····· 1.5
COMPRESSORS
Centrifugal ····· 1.1
Rotary,Lobe or Vane ····· 2.0
Rotary,Screw ····· 2.0
Reciprocation
Direct Connected ★
With out Flywheels ★
*With flywheel and Gear between Compressor and Prime Mover
1 cylinder,single acting ····· 5.0
1 cylinder,double acting ····· 5.0
2 cylinders,single acting ····· 5.0
2 cylinders,double acting ····· 5.0
3 cylinder,single acting ····· 5.0
3 cylinder,double acting ····· 3.0
4 or more cyl.. single act ····· 3.5
4 or more cyl.. double act ····· 3.5
CONVEYORS
Apron,Assembly,Belt,Chain Flight,Screw ····· 1.5
Bucket ····· 2.0
Live Roll,Shaker and Reciprocatio ····· 3.5
▲★CRANES AND HOIST
Main Hoist ····· .5
Skip Hoist ····· 2.5
Slope ····· 2.25
Bridge,Travel or Trolley ····· .5
DYNAMOMETER ····· 1.5
ELEVATORS
Bucket,Centrifugal Discharge ····· 2.0
Freight or Passenger(Not Approved)
Gravity discharge ····· 2.0
ESCALATORS(Not Approved)
EXCITER GENERATOR ····· 1.75
EXTRUDER, PLASTICI ····· 2.25
FANS
Centrifugal ····· 1.1
Cooling Tower ····· 3.0
Forced Draft-Across the Line start ····· 2.0
Forced Draft Motro Driven thru fluid or electric slip clutch ····· 1.5
Gas Recirculating ····· 2.5
Induced Draft with damper control or blade cleaner ····· 2.0
Induced Draft without controls ····· 3.0
FEEDERS ····· 3.0
Apron,Belt,Disc,Screw ····· 2.0
Reciprocation ····· 3.5
GENERATORS
Even Load ····· 1.1
Hoist or Railway Service ····· 2.0
Welder Load ····· 3.0
HAMMERMUILL ····· 2.5
LAUNDRY WASHER OR TUMBLER ····· 3.0
LINE SHAFTS
Any processing Machinery ····· 2.0
MACHINE TOOLS
Auxiliary and Traverse Drive ····· 1.5
Bending Roll,Notching press.
Punch Press, Planer, Plate Reversing ····· 2.5
Main Drive ····· 2.0
MAN LIFTS(Not Approved)
METAL FORMING MACHINES
Draw Bench Carriage and Main Drive ····· 3.0
Extrude ····· 3.0
Forming Machine and Forming Mills ····· 3.0
Slitters ····· 1.5
Wire Drawing or Flattening ····· 2.5
Wire Winder ····· 2.25
Coilers and Uncoilers ····· 2.25
MIXERS(see Agitators)
Concrete ····· 2.5
Muller ····· 2.5
PRESS,PRINTING ····· 2.25
PUG MILL ····· 2.5
PULVERIZERS
Hammermill and Hog ····· 2.5
Roller ····· 2.0
PUMPS
Centrifugal
Constant Speend 1.1
Frequent Speed Changes under Load ····· 2.0
Descakling,with accumlators ····· 2.0
Gear,Rotary, or Vane ····· 1.75
Reciprocating
1 cyl..single or double act. ····· 3.0
2 cyl..single acting ····· 3.0
2 cyl..double acting ····· 2.5
3 or more cyliders ····· 2.0
SCREENS
Air Washing ····· 1.5
Grizzly ····· 3.0
Rotary Coal or Sand ····· 2.0
Vibrating ····· 3.5
Water ····· 1.5
SKI TOWS & LIFTS(Not Approved)

STEERING GEAR ····· 1.5
STOKER ····· 1.5
TUMBLING BARREL ····· 1.5
WINCH,MANEUVERING
Dredge,Marine ····· 2.5
WINDLASS ····· 2.0
WOODWDORKING ····· 2.0
MACHINERY ····· 1.5
WORK LIFT PLATFORMS(Not approved)

Aiphabetical listing of industries
AGGREGATE PROCESSING, CEMENT, MINING KILNS; TUBE,ROD AND BALL MILLS
Direct or on L.S. shaft of Reducer, with final drive Machined Spur Gears ····· 3.0
Single Helical or Herringbone Gears ····· 2.25
Conveyors,Feeders,Screens, Elevators,See General Listing
Crushers,Ore or Stone ····· 3.5
Dryer, Rotary ····· 2.0
Grizzly ····· 3.0
Hammermill or Hog ····· 2.5
Tumbling Mill or Barrel ····· 2.5
BREWING AND DISTILLING
Bottle and Can Filling Machines ····· 1.5
Brew Kettle ····· 1.5
Cookers,Continuous Duty ····· 1.75
Lauter Tub ····· 2.25
Mash Tub ····· 1.75
Scale Hopper,Frequent Peaks ····· 2.25
CLAY WORKING INDUSTRY
Brick Press, Briquette Machine, Clay Working Machine, Plug Mill ····· .25

a. In case of a slide coupling that axial movement occurs more than five times per hour, add 0.5 to the service factor. When electric motors, generators, engines, compressors and other machines are assembled with sleeves or straight roller bearings, axial end float couplings should be used to protect the bearings. When ordering, also order limited end float discs with the coupling.
b. *Contact us for a balanced opposed design.
c. ▲When using in a place with risk to human safety, for safety reasons, consult us before using.
d. ★ Contact us for high peak load applications (such as Metal Rolling Mills)
e. Non-reversing safety factor: The required coupling torque is the same as the peak torque.
f. Reversing safety factor: The required coupling torque is twice the peak torque.

Engine Drive Service Factors

It is necessary to use a service factor for engine drives when the application involves good flywheel regulation to prevent torque fluctuations that are greater than ± 20%. If the torque fluctuation is greater, or if operation is close to serious critical or torsional vibration, a mass elastic study will be required.
To use Table 2, begin by selecting an application service factor from Table 1. Use that service factor to choose the appropriate engine service factor from Table 2. If the service factor from Table 1 is more than 2.5, please submit the complete application details to the factory for an engineering review.

Table 2. Engine Drive Service Factors

Number of cylinders	4 or 5					6 or more				
Service Factor	1.5	1.75	2.0	2.25	2.5	1.5	1.75	2.0	2.25	2.5
Engine Service Factor	2.5	2.75	3.0	3.25	3.5	2.5	2.75	3.0	3.25	3.5

For best results, measure the system characteristics with a torque meter. The service factors provided here are only a guide based on the usual ratio between the coupling catalogue rating and general system characteristics.

Torque Demands Driven Machine	Typical applications for Driven Equipment	Typical Service Factor
	Constant torque such as Centrifugal Pumps, Blowers and Compressors.	1.0
	Continuous duty with some torque variations including Plastic Extruders, Forced Draft Fans.	1.5
	Light shock loads from Metal Extruders, Cooling Towers, Cane Knife, Log Haul.	2.0
	Moderate shock loading as expected from a Car Dumper, Stone Crusher, Vibrating Screen.	2.5
	Heavy shock load with some negative torques from Roughing Mills, Reciprocating Pumps, Compressors, Reversing Runout Talbes.	3.0
	Applications like Reciprocating Compressors with frequent torque reversals, which do not necessarily cause reverse rotations.	Refer to WCC

Shrink Heating

1. Introduction

Heat shrinking is necessary and practical in industries that require more power and precision than is possible with other fitting methods.

2. Interference

1/1,000 to 15/10,000 (mm) of the shaft diameter d

3. Methods and Procedures for Fitting

A) If you use a key, put the key on the shaft first and lubricate it. If there is no key, do not apply lubricant.
B) Before fitting the hub on to the shaft, with the steel flexible coupling insert the tv cover and oil seal first. In case of the gear coupling, insert the sleeve, side cover first.
C) To heat, choose one of the following methods and heat to 135˚C:

① Oxy-acetylene or blow-torch heating — Mark near the surface of the hub with a crayon that melts at 135˚C. Then pass the flame through the inner diameter to heat it. Do not put heat directly on the tooth surface during heating, or heat only one side.

② Heating in a furnace — Set the thermometer to 135˚C and heat for at least three minutes per 1mm thickness. Avoid direct contact with heat sources during heating.

③ Oil bath heating — Put the hub in oil with a boiling point of 177℃ or higher and heat it for six minutes per 1mm thickness. Do not let the surface of the hub touch the bottom of the container during heating.

4. Mount the hub as soon as possible to prevent heat loss.